MovE

Wide Wall Brackets

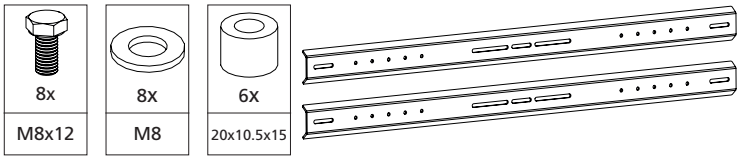

1

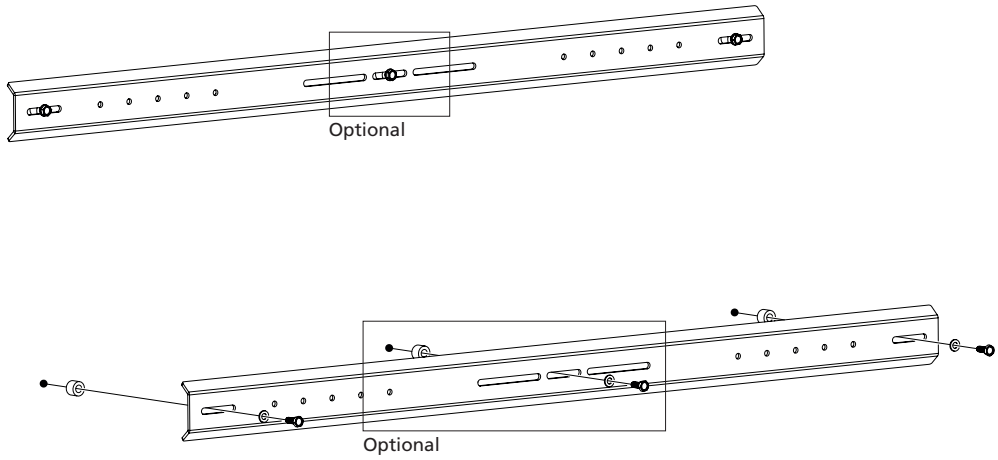

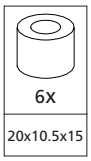

2

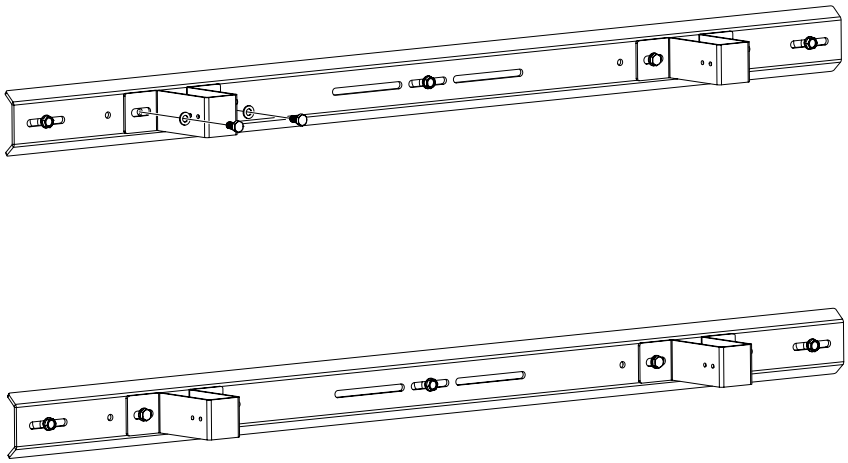

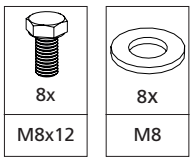

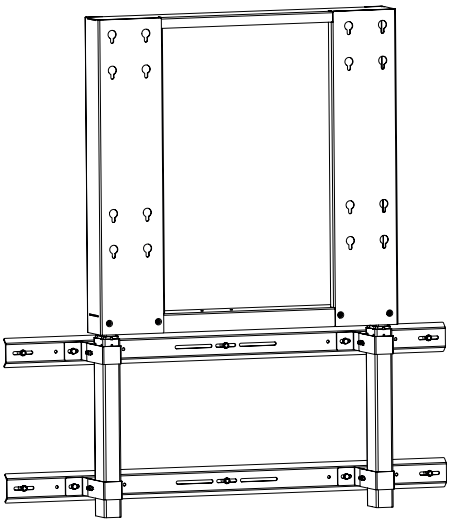

Legamaster International B.V.
Kwinkweerd 62
7241 CW Lochem - The Netherlands
www.legamaster.com

Legamaster, brand of the edding group.

v1